Operator Interface Plus Control
LT4000M SERIES Specifications

LT4000M

LT4000M
Gamme
Caractéristiques
Spécifications
PFXLM4301TADAC
Options
Téléchargement
Bande d'annonce

Related Information

Produits obsolètes
Certification
Enregistrement logiciel

Specifications of PFXLM4301TADAC (Modular Type Analog / Source Output Type)

Display Specifications

Type		TFT Color LCD
Resolution (pixels)		320 x 240 (QVGA)
Active Display Area (W x H)		115.2 x 86.4 mm (4.53 x 3.40 in.)
Display Colors		65,536 colors
Backlight		White LED
		Non-exchangeable
		LED ON / OFF control, adjustable screen saver activation time
Brightness Adjustment		16 levels of adjustment available via touch panel in the configuration menu
Language Fonts *1		Japanese, ASCII, Chinese (Simplified), Chinese (Traditional), Korean, Cyrillic, Thai
Character Sizes		8 x 8, 8 x 16, 16 x 16 and 32 x 32 pixel fonts
Font Sizes		Width can be expanded 1 to 8 times. Height can be expanded 1/2 and 1 to 8 times.
8 x 8 pixels		40 characters per row x 30 rows
8 x 16 pixels		40 characters per row x 15 rows
16 x 16 pixels		20 characters per row x 15 rows
32 x 32 pixels		10 characters per row x 7 rows
Memory	**Application memory** *2	FLASH EPROM 16 MB (includes screen editing program and extended logic program)
	Logic program area	FLASH EPROM 132 KB *3 (equivalent to 15,000 steps)
	Font area	FLASH EPROM 8 MB (when limit exceeded, uses application memory)
	Data backup	nvSRAM 128 KB (rechargeable lithium battery for data backup)
	Variable area	nvSRAM 64 KB (rechargeable lithium battery for data backup)
Touch Panel	**Type**	Resistive Film (analog)
	Lifetime	1 million touches or more
Interface	**Serial (COM1)**	RS-232C/RS485 x 1 RS-232C (Connector type: RJ45, Isolation: None, Maximum baud rate: 115,200 bps, Cable Type: Shielded, Cable Maximum length: 15 m (49 ft), 5 Vdc power supply for RS-232C: None) RS-485 (Connector type: RJ45, Isolation: None, Maximum baud rate: 115,200 bps, Cable Type: Shielded, Cable Maximum length: 200 m (656 ft), Polarization: Setting is required via software when connecting Multiple LTs. Refer to the "GP-Pro EX Device/ PLC Manual" for the setting. 5 Vdc power supply for RS-485: None) *4
	CANopen (master)	CAN-CiA (ISO 11898-2:2002 Part 2), Connector: D-sub9 (pin)
	Ethernet	IEEE802.3 compliant Ethernet x 1 (Connector type: RJ45, Driver: 10 M half duplex (auto negotiation)/ 100 M full duplex (auto negotiation), Cable type: Shielded, Automatic cross-over detection: Yes)
	USB (Type A)	USB 2.0 (Type A) x 1 (Power Supply Voltage: 5Vdc +/-5%, Maximum Current Supplied: 500mA, Maximum Transmission Distance: 5m (16.4 ft.))

	USB (Mini-B)		USB 2.0 (Mini-B) x 1
	Control	**DIO(Source Type)**	12 Points Standard Input (including 2 Points for Fast Input) 6 Points Standard Output, 2 Points for Fast Output
		AIO	2ch analog inputs (13-bit) and 2ch analog inputs (16-bit) for Thermocouple 2ch analog outputs (12-bit)

*1 Please refer to the GP-Pro EX Reference Manual for details on font types and character codes.

*2 Capacity available for user application.

*3 Up to 60,000 steps can be converted in software. However, this reduces application memory capacity (for screen data) by 1 MB.

*4 2-wire connection is available for RS-485. When a Device/PLC supports 2-wire connection, 4 wires (RXD+, TXD+, RXD-, and TXD-) can be short-circuited to be 2 wires (RXD+ and TXD+ = D1, RXD- and TXD- = D0). For details on the connection, refer to the connection manual.

Page Top

General Specifications

Supported Standards and Regulations	UL508 UL508 ANSI/ISA 12.12.01
Rated Input Voltage	24 Vdc
Input Voltage Limits	20 to 28.8 Vd
Acceptable Voltage Drop	10 ms or less at 20.4 Vdc
Power Consumption	13 W or less
In-Rush Current	30 A or less at 28.8 Vdc
Voltage Endurance between power terminal and frame ground (FG)	500 Vdc for 1 minute
Insulation Resistance between power terminal and FG	10 MΩ or higher at 500 Vdc

Page Top

Environmental Specifications

Standard compliance		IEC 61131-2
Ambient operating temperature for the display and the rear module	**Horizontal installation**	0 to 50°C (32 to 122°F)
	Vertical installation	0 to 40°C (32 to 104°F)
Storage temperature		- 20 to 60°C (- 4 to 140°F)
Storage altitude		0 to 10,000 m (0 to 32,808 ft)
Operating altitude		0 to 2,000 m (0 to 6,560 ft)
Surrounding Air and Strage Humidity		5 to 85% w/o condensation (non-condensing, wet bulb temperature 39°C (102.2°F) or less)
Degree of pollution	**IEC60664**	2
Degree of protection	**IEC61131-2**	IP20 with protective covers in place
Corrosive gases		Free of corrosive gases
Dust		≤0.1 mg/m^3 (10^{-7} oz/ft^3) (non-conductive levels)
Atmospheric pressure (Operating Altitude)		800 to 1,114 hPa (2000 m (6,561 ft) or lower)
Vibration resistance	**Mounted on a DIN rail**	3.5 mm (0.138 in.) fixed amplitude from 5 to 8.4 Hz 9.8 m/s^2 (1 g_n) fixed acceleration from 8.4 to 150 Hz
	Mounted on a panel	3.5 mm (0.138 in.) fixed amplitude from 5 to 8.6 Hz 9.8 m/s^2 (1 g_n) fixed acceleration from 8.6 to 150 Hz
Mechanical shock resistance	**Mounted on a DIN rail**	147 m/s^2 (15 g_n) for a duration of 11 ms
	Mounted on a panel	147 m/s^2 (15 g_n) for a duration of 6 ms
Electrostatic discharge	**IEC/EN 61000-4-2**	8 kV (air discharge) 6 kV (contact discharge)
Rediated radio frequency electromagnetic fields	**IEC/EN 61000-4-3**	10 V/m (80 MHz to 3 GHz)

Fast transients / Burst noise	**IEC/EN 61000-4-4**	Power lines: 2 kV Digital I/O: 1 kV Relay outputs: 2 kV Ethernet line: 1 kV COM line: 1 kV CAN line: 1 kV
Surge immunity	**IEC/EN 61000-4-5**	Power supply: CM: 1 kV; DM: 0.5 kV Digital I/O: CM: 1 kV; DM: 0.5 kV Shielded cable: 1 kV CM = line-earth DM = line-line
Conducted disturbances induced by radio-frequency fields	**IEC/EN 61000-4-6**	10 Veff (0.15 to 80 MHz)
Mains terminal dusturbance voltage	**EN 55011 (IEC/CISPR11)**	150 to 500 kHz, quasi peak 79 dBµV
		500 kHz to 30 MHz, quasi peak 73 dBµV
Electric field strength	**EN 55011 (IEC/CISPR11)**	30 to 230 MHz, quasi peak 10 m @40 dBµV/m
		230 MHz to 1 GHz, quasi peak 10 m @47 dBµV/m
Vibration immunity (operating)		IEC 61131-2
Protection structure		NEMA TYPE 4X (indoors, with panel embedded)
Protection (front module)		IP65f - (IEC 60529)
Protection (rear module)		IP 20 - (IEC 60529)
Shock immunity (operating)		IEC 61131-2 15 gn 11 ms
Cooling method		Natural air circulation
Weight		784 g (27.65 oz)
Color		Front module: PT404 Rear module: RAL 7032
Material		Front module: PAA+GF Rear module: PC/PBT

Page Top

Digital Inputs

Digital Input Characteristics

Rated Current		5 mA
Inrush Values	**Voltage**	30 Vdc
	Current	6.29 mA max.
Input impedance		4.9 kΩ
Input type		Sink/Source
Rated voltage		24 Vdc
Maximum Allowable Voltage		28.8 Vdc
Input limit values	**ON Voltage**	15 Vdc or more (15 to 28.8 Vdc)
	OFF Voltage	5 Vdc or less (0 to 5 Vdc)
	ON Current	2.5 mA or more
	OFF Current	1.0 mA or less
Isolation	**Method**	Photocoupler Isolation
	Between internal logic	500 Vdc
Filtering		0.5 ms to 30.0 ms
IEC61131-2 edition 3 type		Type 1
Compatibility		Supports 2 wire and 3 wire sensors
Cable type and length		Shielded: Maximum 100 m (328 ft) Non-shielded: 50 m (164 ft)
Terminal blocks		Type: 3.5 mm (0.137 in.) pitch Terminal blocks are removable
Input paralleling		No

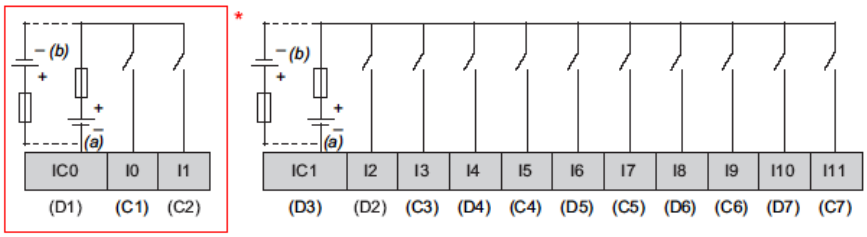

a Sink inputs (positive logic)
b Source inputs (negative logic)

* I0 and I1 are Fast input terminals and can be also used as a Standard input. For specifications, see the specifications of Fast Input.

Page Top

High Speed Counter Input Characteristics

Rated Current	**Voltage**	24 Vdc
	Current	7.83 mA
Inrush values	**Voltage**	30 Vdc
	Current	9.99 mA
Input impedance		3.2 kΩ
Input type		Sink/Source
Rated voltage		24 Vdc
Maximum Allowable Voltage		28.8 Vdc
Input limit values	**ON Voltage**	15 Vdc or more
	OFF Voltage	5 Vdc or less
	ON Current	5 mA or more
	OFF Current	1.5 mA or less
Isolation	**Method**	Photo coupler Isolation
	Between channels logic	500 Vdc
Filtering		None, 4 µs, 40 µs
IEC61131-2 edition 3 type		Type 1
Compatibility		Supports 2 wire and 3 wire sensors
Cable	**Type**	Shielded
	Length	Maximum 10 m (33 ft)
Terminal blocks		Type: 3.5 mm (0.137 in.) pitch Terminal blocks are removable
Maximum frequency		· 100 kHz is the maximum frequency for Single-phase · 50 kHz is the maximum frequency for 2-phase · Duty Rate: 45 to 55%
Phase Counting Mode		· Single phase · 2 Phase x2 · 2 Phase x4 · 2 Phase x2 Reverse · 2 Phase x4 Reverse
Response time	**Marker**	1 ms
	Preload	1 ms
	Prestrobet	1 ms
	Synchronize output	2 ms
Min. Pulse Width(Pulse input)		Counter: 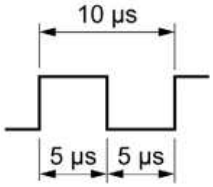 Pulse Catch Input signal ON width 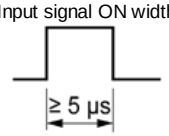
Input paralleling		No

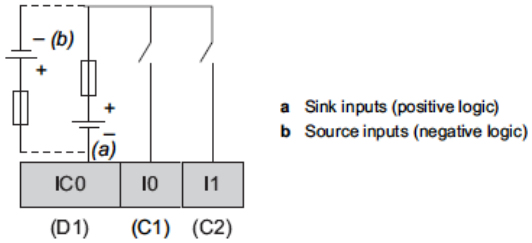

Page Top

Digital Outputs

Transistor Output Characteristics

Rated Voltage		24Vdc
Output range		19.2 to 28.8 Vdc
Output type		Source
Rated current		0.3 A/point, 1.8 A/common
Residual voltage		1.5 Vdc or less for I= 0.1A
Delay		Off to on (0.3 A load): 1.1ms On to off (0.3 A load): 2ms NOTE: The delay is not including the cable delay.
Isolation	**Method**	Photocoupler Isolation
	Between internal logic	500 Vdc
Minimum resistor load		80 Ω at 24 Vdc
Cable length		Non-shielded: 150 m (492 ft)
Protection against short circuit		No
Terminal blocks		Type: 3.5 mm (0.137 in.) pitch Terminal blocks are removable

NOTE: Refer to LT4201TM/4301TM Hardware Manual about Protecting Outputs from Inductive Load Damage for additional information on this topic.

Source outputs (positive logic)

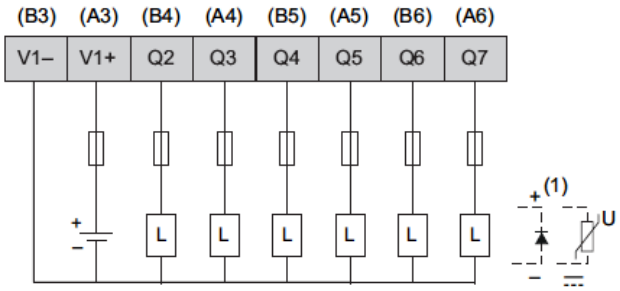

(1) When connecting as power surges

Caution: Q0 and Q1 circuits are push-pull circuits. The following is the operation of the push-pull circuit at the Sink Output and the Source Output.
Sink Output: +24(V) is output to terminal Q0, Q1 when the logic for Q0, Q1 is off
Source Output: 0(V) is output to terminal Q0, Q1 when the logic for Q0, Q1 is off

Standard Output terminals Q2 or later are common open collector outputs.
Do not connect Fast Output terminals Q0, Q1 and Standard Output terminals Q2 or later. It will short.

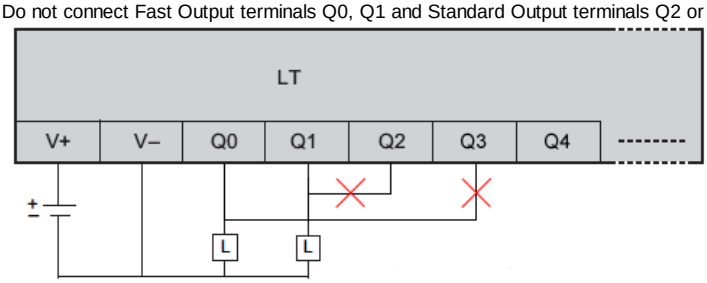

If you add a manual circuit to terminal Q0, Q1, isolate the manual circuit and terminal Q0, Q1 with a relay. Without isolation, it will short.

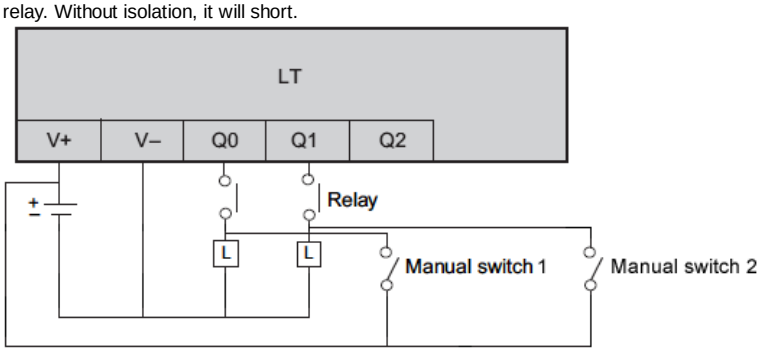

Page Top

Pulse Output/PWM Output/High-speed Counter (Synchronize Output) Characteristics

Output type		Source	
Rated voltage		24 Vdc	
Power supply input range		19.2 to 28.8 Vdc	
Power supply reverse protection		Yes	
Pulse Output/PWM output current		50 mA/point, 100 mA/common	
Response time for original input		2 ms	
Isolation resistance	**Between fast outputs and internal logic**	10 MΩ or more	
	Between power supply port and protective earth ground (PE) = 500 Vdc	10 MΩ or more	
Residual voltage	**for I = 0, 1 A**	1.5 Vdc or less	
Delay		Off to on (50 mA load): 1.1ms On to off (50 mA load): 1.1ms NOTE: The delay is not including the cable delay.	
Minimum load impedance		80 Ω	
Maximum Pulse output frequency		50 KHz	
Maximum PWM output frequency		65 kHz	
Accuracy Pulse Output/PWM Output	**Frequency**	Accuracy	Duty
	10 to 1000 Hz	1%	1 to 99%
	1.001 to 20 kHz	5%	5 to 95%
	20.001 to 45 kHz	10%	10 to 90%
	45.001 to 65 kHz	15%	15 to 85%
Duty rate range		1 to 99%	
Cable	**Type**	Shielded, including 24 Vdc power supply	
	Length	Maximum 5 m (16 ft)	
Terminal blocks		Type: 3.5 mm (0.137 in.) pitch Terminal blocks are removable	

NOTE: When using the acceleration/deceleration pulse output, there is a 1% maximum error for the frequency.

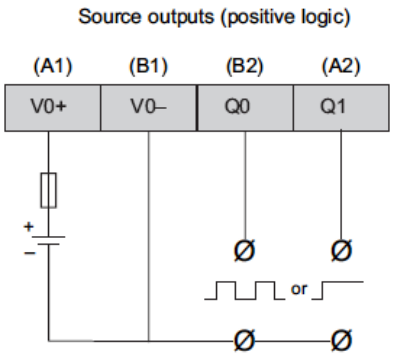

Caution: Q0 and Q1 circuits are push-pull circuits. The following is the operation of the push-pull circuit at the Sink Output and the Source Output.
Sink Output: +24(V) is output to terminal Q0, Q1 when the logic for Q0, Q1 is off
Source Output: 0(V) is output to terminal Q0, Q1 when the logic for Q0, Q1 is off

Standard Output terminals Q2 or later are common open collector outputs.
Do not connect Fast Output terminals Q0, Q1 and Standard Output terminals Q2 or later. It will short.

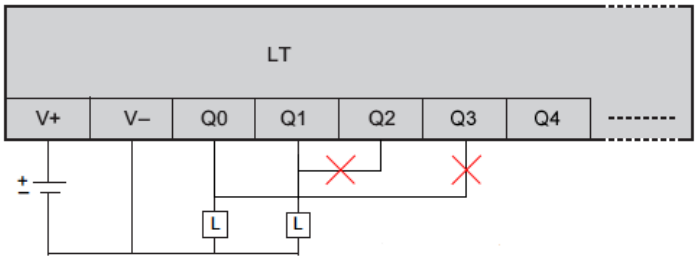

If you add a manual circuit to terminal Q0, Q1, isolate the manual circuit and terminal Q0, Q1 with a relay. Without isolation, it will short.

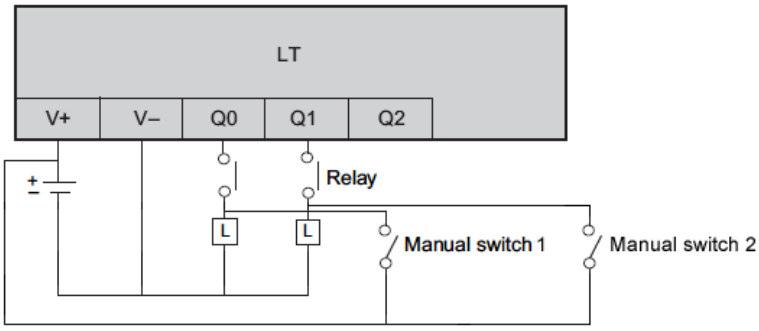

Page Top

Analog Inputs and Analog Outputs

Analog Input Characteristics

Characteristic		Voltage input	Current input
Number of maximum input		2	
Input type		Single-ended	
Input range		-10 to 10 Vdc/0 to 10 Vdc	0 to 20 mA/4 to 20 mA
Input impedance		1 MΩ or more	250 ± 0.11% Ω
Sample duration time		10 ms per channel + 1 scan time	
Total input system transfer time		20 ms + 1 scan time	
Input tolerance	Maximum deviation at 25°C (77°F) without electromagnetic disturbance	± 1% of the full scale	
	Maximum deviation	± 2.5% of the full scale	
Digital resolution		13 bits	

Temperature drift		± 0.06% of the full scale	
Common mode characteristics		80 db	
Cross talk		60 db	
Non-linearity		± 0.4% of full scale	
Input value of LSB		5 mV	10 µA
Maximum allowed overload (no damages)		± 30 Vdc (less than 5 minutes) ± 15 Vdc (No damage)	± 30 mA dc
Protection type		Photo coupler between input and internal circuit	
Cable	**Type**	Shielded	
	Length	Must be less than 3 m for IEC61131-2 conformance. Maximum transmission distance is 10m.	
Terminal blocks		Type: 3.5 mm (0.137 in.) pitch Terminal blocks are removable	
Isolation		External input: Photo-coupler isolation Between channels: Non-isolated	

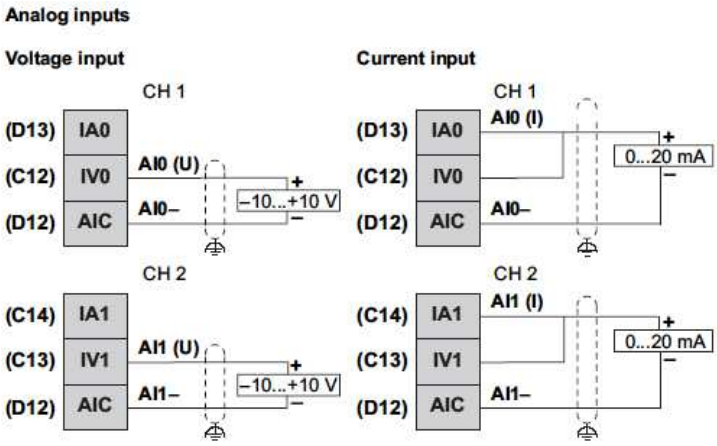

Page Top

Temperature Input (Temperature Probes) Characteristics

Input sensor type		Pt100/Pt1000/Ni100/Ni1000
Input temperature range		Pt100/Pt1000: -200 to 600°C (-328 to 1112°F) Ni100/Ni1000: -20 to 200°C (-4 to 392°F)
Measuring current	**Pt100/Ni100**	1.12 mA ± 3.5%
	Pt1000/Ni1000	0.242 µA ± 3.5%.
Input impedance		Typically 10 MΩ
Sample duration time		10 ms+1 cycle time
Wiring type		2-wire or 3-wire connection configured by software for all inputs
Conversion mode		Sigma delta type
Input filter		Low pass
Resolution temperature value		0.1°C (0.18°F)
Detection type		Open circuit (detection on each channel)
Input tolerance*	**Maximum deviation at 25°C (77°F) without electromagnetic disturbance**	± 5°C (41°F)
	Maximum deviation at 25 to 50°C (77 to 122°F)	Pt type: ± 5.6°C (42.08°F) Ni type: ± 5.2°C (41.36°F)
Temperature drift		30 ppm/°C
Digital resolution		16 bits

Rejection in differential mode	**50/60 Hz**	Typically 60 dB
Common mode rejection		Typically 80 dB
Isolation Method		Photocoupler Isolation
Permitted input signal		±5 Vdc max.
Cable length	**Pt100/Ni100**	20 Ω or less
	Pt1000/Ni1000	200 Ω or less
Terminal blocks		Type: 3.5 mm (0.137 in.) pitch Terminal blocks are removable
Noise resistance - cable		Shielded cable is necessary
*** Excluding errors caused by the wiring**		

Analog inputs PT100

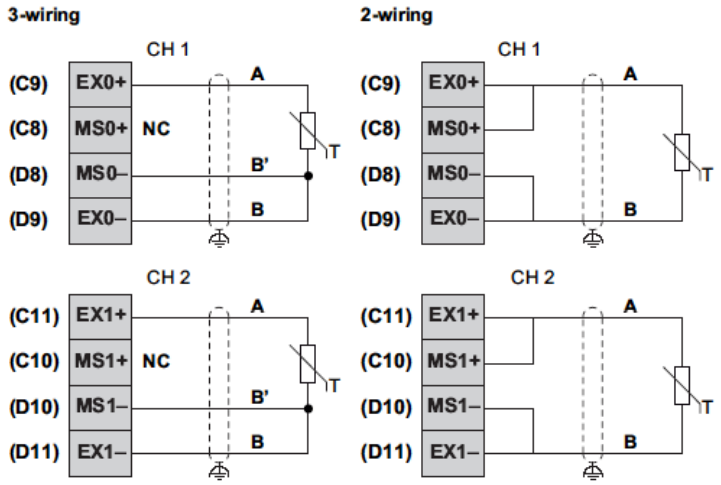

Page Top

Temperature Input (Thermocouple) Characteristics

Input sensor type		Thermocouple
Input type range(1)		J (-200 to 760°C) (-328 to 1400°F) K (-240 to 1370°C) (-400 to 2498°F) R (0 to 1600°C) (32 to 2912°F) B (200 to 1800°C) (392 to 3272°F) S (0°C to 1600°C) (32 to 2912°F) T (-200 to 400°C) (-328 to 752°F) E (-200 to 900°C) (-328 to 1652°F) N (-200 to 1300°C) (-328 to 2372°F)
Input impedance		Typically 10 MΩ
Sample duration time		10 ms+1 cycle time
Conversion mode		Sigma delta type
Digital resolution		16 bits
Input filter		Low pass
Resolution temperature value		0.1°C (0.18°F) (Type J)
Detection type		Open circuit (detection on each channel)
Input tolerance	**Maximum deviation at 25°C (77°F) without electromagnetic disturbance**	0.2 % of the full scale, plus standard point of compensation precision at +/- 6°C.
	Maximum deviation	0.28 % of full scale range
Temperature drift		30 ppm/°C
Input tolerance - terminal temperature compensation		± 5°C (41°F) after 10 min.
Cold junction compensation in the temperature range (0 to 50°C (122°F))		Internal cold junction error: +/- 6°C (42.8°F) after operating 45 minutes.

Rejection in differential mode	**50/60 Hz**	Typically 60 dB
Common mode rejection		Typically 80 dB
Isolation Method		Photocoupler Isolation
Permitted input signal		± 5 Vdc max.
Warm up time		45 minutes
Terminal blocks		Type: 3.5 mm (0.137 in.) pitch Terminal blocks are removable
Noise resistance - cable		Shielded cable is necessary
(1) Temperature measurement on PCB at terminal block for cold junction compensation.		

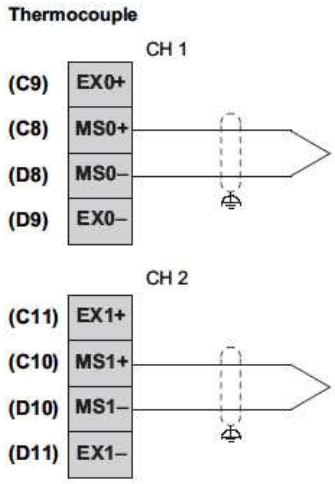

Page Top

Analog Output Characteristics

Characteristic		Voltage Output	Current Output
Maximum number of outputs		2	
Output range		-10 to 10 Vdc/0 to 10 Vdc	0 to 20 mA / 4 to 20 mA
Load impedance		2 kΩ or more	300 Ω or more
Application load type		Resistive load	
Setting time		10 ms	
Total output system transfer time		10 ms + 1 scan time	
Output tolerance	**Maximum deviation at 25°C (77°F) without electromagnetic disturbance**	± 1% of the full scale	
	Maximum deviation	± 2.5% of the full scale	
Digital resolution		12 bits	
Temperature drift		± 0.06% of the full scale	
Output ripple		± 50 mV	
Cross talk		60 db	
Non-linearity		± 0.5% of full scale	
Output value of LSB		6 mV	12 µA
Protection type		Photo coupler between input and internal circuit	
Output protection		Short circuit protection: Yes Open circuit protection: Yes	
Output behavior if input power supply is less than the power failed threshold		Set to 0	
Cable	**Type**	Shielded	
	Length	Must be less than 3 m for IEC61131-2 conformance. Maximum transmission distance is 10m.	

Terminal blocks	Type: 3.5 mm (0.137 in.) pitch Terminal blocks are removable
Isolation	External input: Photo-coupler isolation Between channels: Non-isolated

Analog outputs

Voltage and current outputs

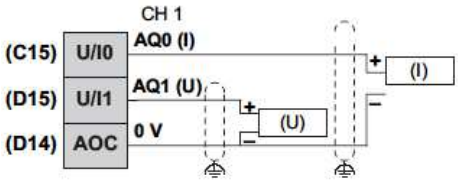

Page Top

Terminal Blocks

Pin Arrangement	Group	Pin	Signal Name	Group	Pin	Signal Name
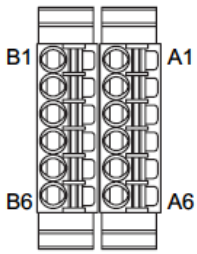	Fast Output	A1	V0+	Fast Output	B1	V0-
		A2	Q1		B2	Q0
	Standard Output	A3	V1+	Standard Output	B3	V1-
		A4	Q3		B4	Q2
		A5	Q5		B5	Q4
		A6	Q7		B6	Q6

Pin Arrangement	Group	Pin	Signal Name	Group	Pin	Signal Name
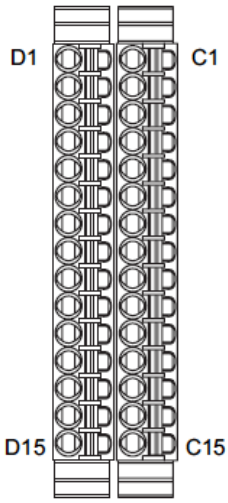	Fast Input/ Standard Input	C1	I0	Fast Input/ Standard Input	D1	IC0
		C2	I1	Standard Input	D2	I2
		C3	I3		D3	IC1
	Standard Input	C4	I5		D4	I4
		C5	I7		D5	I6
		C6	I9		D6	I8
		C7	I11		D7	I10
	Temperature Input	C8	MS0+	Temperature Input	D8	MS0-
		C9	EX0+		D9	EX0-
		C10	MS1+		D10	MS1-
		C11	EX1+		D11	EX1-
	Analog Input	C12	IV0	Analog Input	D12	AIC
		C13	IV1		D13	IA0
		C14	IA1	Analog Output	D14	AOC
	Analog Output	C15	U/IO		D15	U/I1

Page Top

External Dimensions

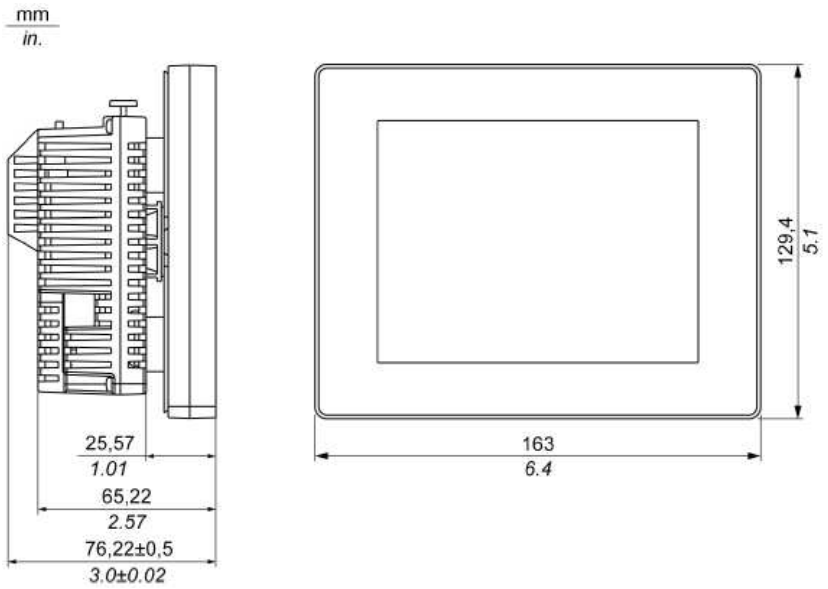

Panel Cut-out

Unit : mm [in.]

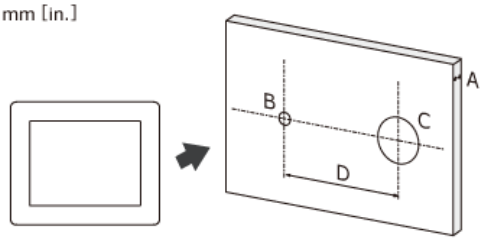

A	B	C	D
1.5 to 6 [0.06 to 0.23]	4.00 [0.15]	22.50 [0.88]	30.00 [1.18]

* If rotating torque acted on a display module is 2.5 N.m (22.12 in-lb) or more, use an anti-rotation tee which is supplied with a LT unit. The anti-rotation tee supports up to 6 N.m (53.10 in-lb).

Page Top

Home | Produits | Support | Contactez-nous | Pro-face... | Recherche Recherche Privacy Policy